卷册检索号 SEARCH NO. OF THE VOLUME
MLHVDC-LCS-CET-DD-EC-0205 49-B60011S-D0205

第 1 页 PAGE 共 1 页 OF

图纸文件目录（首页）

CATALOG OF DRAWING DOCUMENTS (HEAD PAGE)

拉合尔±660kV换流站 工程 施工图 阶段
±660kV Lahore Converter Station PROJECT Detail Design DESIGN STAGE

电气一次 专业 第 02 卷 第 05 册
Electric SPECIALITY VOLUME BOOK

卷册名称 500kV交流滤波器HP12/24小组接线及平、断面图
Volume name SLD and Arrangement of 500kV HP12/24 ACF Sub-bank

批 准 APPROVED BY	刘伟
审 核 REVIEWED BY	田俊强
设计/勘测 DESIGNED BY/ SURVEYED BY	范岩
图纸 DRAWING 07 张 NOS.	打印件 / 本 PRINTED COPIES NOS.

序号 No.	图 号 DRAWING NO.	文件名称 DOCUMENT TITLE	版本 EDITION	张 NOS.	本 NOS.	备注 REMARKS
01	40-B60011S-D0205-001	卷册说明 General Description	A	1		
02	40-B60011S-D0205-002	HP12/24交流滤波器小组位置示意图 HP12/24 Filter Bank Location Schematic Drawing	A	1		
03	40-B60011S-D0205-003	HP12/24交流滤波器小组平面布置及接线图 HP12/24 AC Filter Layout and SLD	A	1		
04	40-B60011S-D0205-004	HP12/24交流滤波器小组1-1断面图 Section 1-1 of HP12/24 ACF Sub-bank	A	1		
05	40-B60011S-D0205-005	HP12/24交流滤波器小组2-2、3-3断面图 Section 2-2/3-3 of HP12/24 ACF Sub-bank	A	1		
06	40-B60011S-D0205-006	HP12/24交流滤波器小组A-A--E-E断面图 Section A-A to E-E of HP12/24 ACF Sub-bank	A	1		
07	40-B60011S-D0205-007	设备材料汇总表 Summary of Equipment and Materials	A	1		

注:

卷册说明

1. 全站共8组HP12/24滤波器小组，具体布置参见电气总平面。
2. 本工程500kV交流HP12/24滤波器小组设备供货情况如下：
   - 2.1. 高压电容器C1（含T1及连接线），低压电容器C2 -- 桂林电力电容器有限责任公司；
   - 2.2. 电抗器L1，L2 -- 北京电力设备总厂有限公司；
   - 2.3. 电阻器R1 -- 上海吉泰电阻器有限公司；
   - 2.4. 电流互感器T2，T3，T4 -- 江苏思源赫兹互感器有限公司；
   - 2.5. 避雷器F1，F2 -- 抚顺电瓷制造有限公司；
   - 2.6. 110kV，35kV支柱绝缘子 -- 抚顺电瓷制造有限公司；
3. 本工程交流HP12/24滤波器小组高压电容器进线采用2xLGKK-600铝钢扩径空心导线（开列于B60011S-D0203分册）；设备间连线采用JL-300-37铝绞线，中性点管母采用6063G-ø100/90的铝管母线。
4. 根据计算，电位E1点（与高压滤波电容器C1低压端相连）最小空气净距（相对地）为900mm；电位E2点（滤波电抗器L1的低压端）最小空气净距（相对地）为300mm；电位E3点（与低压电容器C2低压端相连）最小空气净距（相对地）为300mm。E1，E2和E3位置参见平面布置图中的配置接线图。
5. 采用JL/G1A-300/25-48/7为ø100/90支撑管母阻尼线，管母阻尼线长度为管母长度的110%。
6. 土建施工设备基础时，电气安装人员应密切配合，并应核对现场实际到货设备是否与设计图纸相符。
7. 设备安装前，应仔细阅读厂家资料并按安装要求施工。
8. 设备材料表"B60011S-D0205-007"按照全站8组HP12/24使用总量开列。
9. 本分册的金具型号参考辽宁锦兴电力金具科技股份有限公司样本中的金具型号开列。
10. HP12/24交流滤波器小组设备安装见"B60011S-D0206"分册.

General Description

1. There are 8 HP12/24 AC filter banks in total. Layout is shown in B60011S-D0205-002.
2. The manufacturers of 500kV HP12/24 filter are shown as below：
   - 2.1. Capacitor C1（include T1），Capacitor C2 -- Guilin Power Capacitor Co.,Ltd.；
   - 2.2. Inductor L1，L2 -- Beijing Power Equipment Group Co.,Ltd.；
   - 2.3. Resistor R1 -- Shanghai GINO TELEMA Resistors Co.,Ltd.；
   - 2.4. Current Transformer T2，T3，T4 -- Jiangsu Sieyuan Hertz Instrument Transformer Co.,Ltd.；
   - 2.5. Serge Arrester F1，F2 -- Fushun Electric Porcelain Manufacturing Co.,Ltd.；
   - 2.6. Post-insulator 110kV，35kV -- Fushun Electric Porcelain Manufacturing Co.,Ltd.；
3. HP12/24 filter bank high voltage capacitor incoming line is 2xLGKK-600 aluminum steel expanded diameter hollow wire (listed in volume B60011S-D0203); JL-300-37 aluminum stranded wire for equipment connection；neutral bus uses 6063G-ø100/90 aluminum tube bus.
4. According to the calculation, the potential E1 point (connected to the low voltage end of the high voltage filter capacitor C1) minimum air clearance is 900mm; the potential E2 point (low voltage end of the filter reactor L1) minimum air clearance is 300mm; potential E3 point (connected to the low voltage end of low voltage capacitor C2) minimum air clearance is 300mm. For the E1, E2 and E3 positions, see the single line diagram in the plan.
5. JL/G1A-300/25-48/7 is used as the ø100/90 support tube damping line, and the length of the tube damping line is 110% of the length of the tube.
6. When constructing the foundation of civil engineering equipment, the electrical installation should cooperate closely and check whether the actual arrival equipment at the site is consistent with the design drawings.
7. Before installing the equipment, carefully read the manufacturer's information and construct according to the installation requirements.
8. The equipment material table "B60011S-D0205-007" is listed according to the total amount of HP12/24 used in the whole station.
9. The model of the fittings in this volume is listed with reference to the fittings in the sample of Liaoning Jinxing Electric Power Technology Co., Ltd.
10. HP12/24 AC filter equipment installation is shown in "B60011S-D0206".

巴基斯坦默蒂亚里—拉合尔±660kV直流输电工程
±660kV HVDC Project from Matiari to Lahore in Pakistan

NATIONAL TRANSMISSION & DESPATCH COMPANY (NTDC) LIMITED PAKISTAN

CONTRACTOR 国家电网 STATE GRID 中国电力技术装备有限公司 CHINA ELECTRIC POWER EQUIPMENT AND TECHNOLOGY CO.,LTD.

拉合尔±660kV换流站
±660kV Lahore Converter Station

设计阶段 PHASE: 施工图 Detailed Design

M L H V D C - L C S - C E T - D D - E C - 0 2 0 5 - 0 0 1 A

	姓名 Name	日期 Date
设计 Designed	沈岩	2019.06.30
校核 Checked	秦迎 葛斌	2019.06.30
审核 Reviewed	田俊强	2019.06.30
批准 Approved	张伟	2019.06.30
比例 Scale	1:1	图号 DWG NO. 49-B60011S-D0205-001

卷册说明
General Description

版本 REV. A

297X420

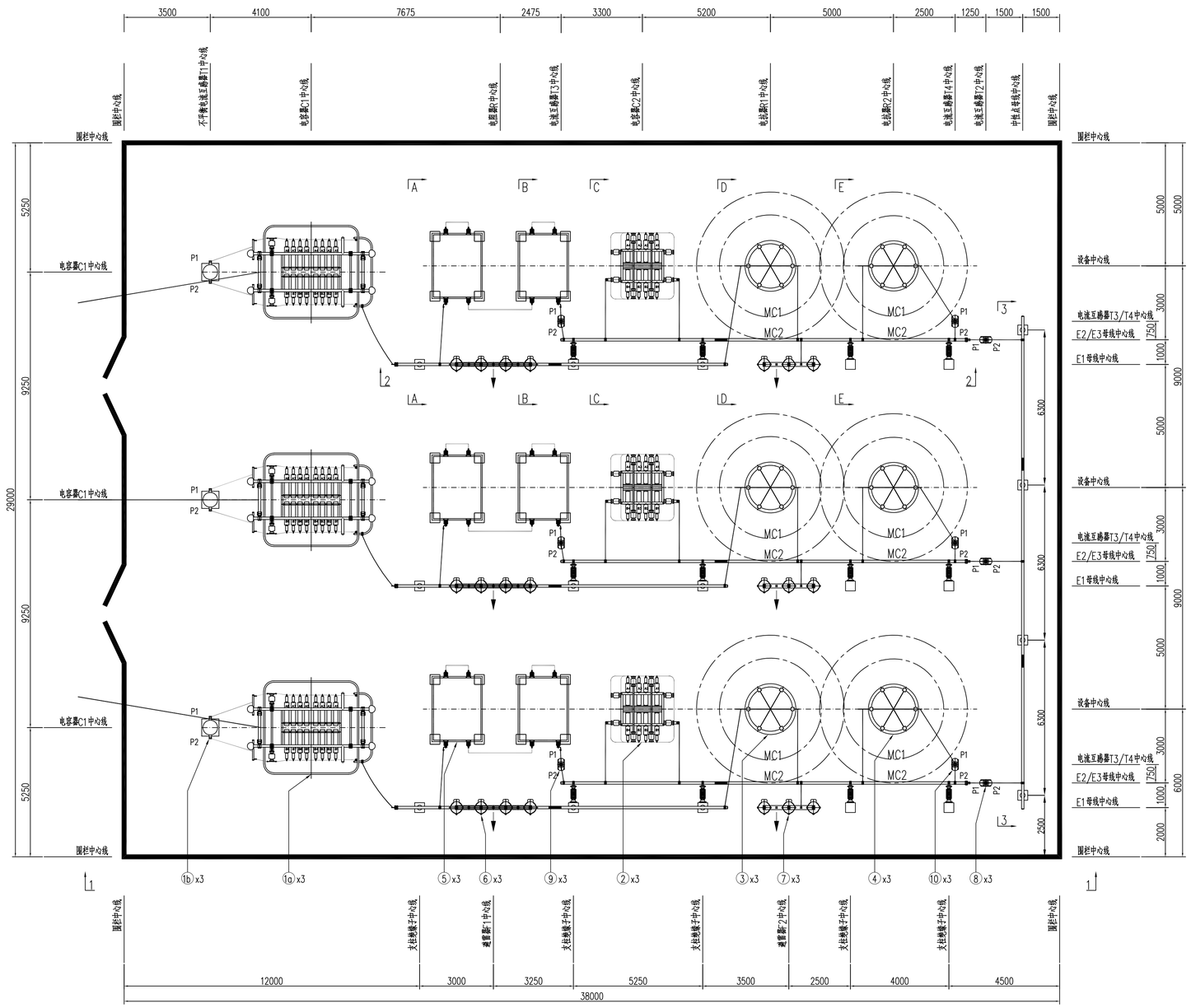

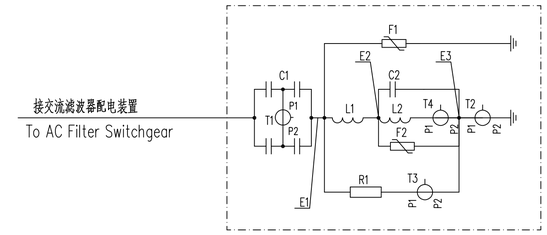

HP12/24 交流滤波器小组配置接线图

Single Line Diagram of HP12/24 AC Filter

说明：

1、全站共8组HP12/24交流滤波器组，本图为HP12/24交流滤波器组的平面布置图，其相对位置及方向参见B60011S-D0405-002图，材料表中所列材料为一组所需；

2、电抗器L1：小金属部件距线圈中心的最小距离MC1要求大于2270mm，铁磁闭环回路距电抗器中心的最小距离（如接地线、混凝土钢筋等）MC2要求大于3000mm，电抗器L2：小金属部件距线圈中心的最小距离MC1要求大于2240mm，铁磁闭环回路距电抗器中心的最小距离（如接地线、混凝土钢筋等）MC2要求大于3000mm；

3、配置接线图中"E1"、"E2"、"E3"表示用于空气净距校验的等电位点 "E1点"（与高压电容器C1低压端相连）最小空气净距（相对地）为900mm，"E2点"（与高压电抗器L1低压端相连）最小空气净距（相对地）为300mm，"E3点"（低压电容器C2、电阻器R1的低压端）最小空气净距（相对地）为300mm；

4、避雷器监测器的朝向如平面布置图中箭头"→"朝向所示；

5、场地不平整需调整时，同一围栏内所有设备地平基准应采用统一基准；

6、设备相序与B60011S-D0203图保持一致。

NOTE:

1. There are 8 of HP12/24 AC filter banks in the whole station. This drawing shows its layout. For the relative position and direction, refer to the drawing of B60011S-D0405-002. The materials listed in the material table are for one group；

2. Reactor L1: The minimum distance of small metal parts from the center of the coil（MC1）should be greater than 2070mm, and the minimum distance of the ferromagnetic closed-loop circuit from the center of the reactor（MC2）should be greater than 3000mm. Reactor L2: MC1 should be greater than 2040mm, MC2 should be greater than 3000mm;

3. "E1", "E2", "E3" in the configuration wiring diagram indicate the equipotential point for air clearance check. "E1 point" minimum air clearance is 900mm, "E2 point" minimum air clearance (relatively) is 300mm, "E3 point" is 300mm;

4. The orientation of the arrester monitor is as indicated by the arrow →;

5. When the site is uneven and needs to be adjusted, the grounding standard for all equipment in the same fence shall adopt a unified benchmark;

6. The phase sequence of the device is consistent with B60011S-D0203.

设备材料表

编号	名 称	规 范	单位	数量 每相	数量 每组	备 注
1a	高压电容器C1	TAL510-121680/585-1QW	组	1	3	桂林电力电容器有限责任公司
1b	电流互感器T1	LB7-330，0.5/1A，0.2/0.2，5VA	台	1	3	桂林电力电容器有限责任公司
2	电容器C2	TAL74.8-6304/394-1W	组	1	3	桂林电力电容器有限责任公司
3	电抗器L1	LKK-35-391.8-19.463	台	1	3	北京电力设备总厂有限公司
4	电抗器L2	LKK-20-495.9-9.762	台	1	3	北京电力设备总厂有限公司
5	电阻器R	600Ω	组	1	3	上海吉泰电阻器有限公司
6	避雷器F1	Y71W1-144/354W	台	1	3	抚顺电瓷制造有限公司
7	避雷器F2	Y10W1-48/109.2W	台	1	3	抚顺电瓷制造有限公司
8	电流互感器T2	LZZBJ-24W，300/1A，5P20/5P20/0.2/0.2，5VA	套	1	3	江苏思源赫兹互感器有限公司
9	电流互感器T3	LZZBJ-24W，50/1A，5P20/5P20，5VA	套	1	3	江苏思源赫兹互感器有限公司
10	电流互感器T4	LZZBJ-24W，500/1A，5P10/5P10，5VA	套	1	3	江苏思源赫兹互感器有限公司

Table of Equipment and Materials

NO.	Name	Specification	Unit	Qty Per Phase	Qty Per Group	Remark
1a	Capacitor C1	TAL510-121680/585-1QW	Set	1	3	Guilin Power Capacitor Co.,Ltd
1b	Current Transformer T1	LB7-330，0.5/1A，0.2/0.2，5VA	Set	1	3	Guilin Power Capacitor Co.,Ltd
2	Capacitor C2	TAL74.8-6304/394-1W	Set	1	3	Guilin Power Capacitor Co.,Ltd
3	Reactor L1	LKK-35-391.8-19.463	Set	1	3	Beijing Power Equipment Group Co.,Ltd.
4	Reactor L2	LKK-20-495.9-9.762	Set	1	3	Beijing Power Equipment Group Co.,Ltd.
5	Resistor R	600Ω	Set	1	3	Shanghai Gino Telema Resistors Co.,Ltd
6	Serge Arrester F1	Y71W1-144/354W	Set	1	3	Fushun Electric Porcelain Manufacturing Co.,Ltd.
7	Serge Arrester F2	Y10W1-48/109.2W	Set	1	3	Fushun Electric Porcelain Manufacturing Co.,Ltd.
8	Current Transformer T2	LZZBJ-24W，300/1A，5P20/5P20/0.2/0.2，5VA	Set	1	3	Jiangsu Sieyuan Hertz
9	Current Transformer T3	LZZBJ-24W，50/1A，5P20/5P20，5VA	Set	1	3	Jiangsu Sieyuan Hertz
10	Current Transformer T4	LZZBJ-24W，500/1A，5P10/5P10，5VA	Set	1	3	Jiangsu Sieyuan Hertz

巴基斯坦默蒂亚里—拉合尔±660kV直流输电工程

±660kV HVDC Project from Matiari to Lahore in Pakistan

NATIONAL TRANSMISSION & DESPATCH COMPANY (NTDC) LIMITED PAKISTAN

CONTRACTOR 国家电网 STATE GRID 中国电力技术装备有限公司

拉合尔±660kV换流站

±660kV Lahore Converter Station

设计阶段 PHASE：施工图 Detailed Design

MLHVDC-LCS-CET-DD-EC-020 5-003A

	姓名 Name	日期 Date
设计 Designed	沈二宏	2019.06.30
校核 Checked	秦迎春	2019.06.30
审核 Reviewed	田俊强	2019.06.30
批准 Approved	刘华	2019.06.30

HP12/24交流滤波器小组平面布置及接线图

HP12/24 AC Filter Layout and SLD

电气二次	王建勇	2019.03
结构	程俊	2019.03
专业 Speciality	会签 Sign	日期 Date

比例 Scale 1:100　图号 DWG NO. 49-B60011S-D0205-003　版本 REV. A

594X841

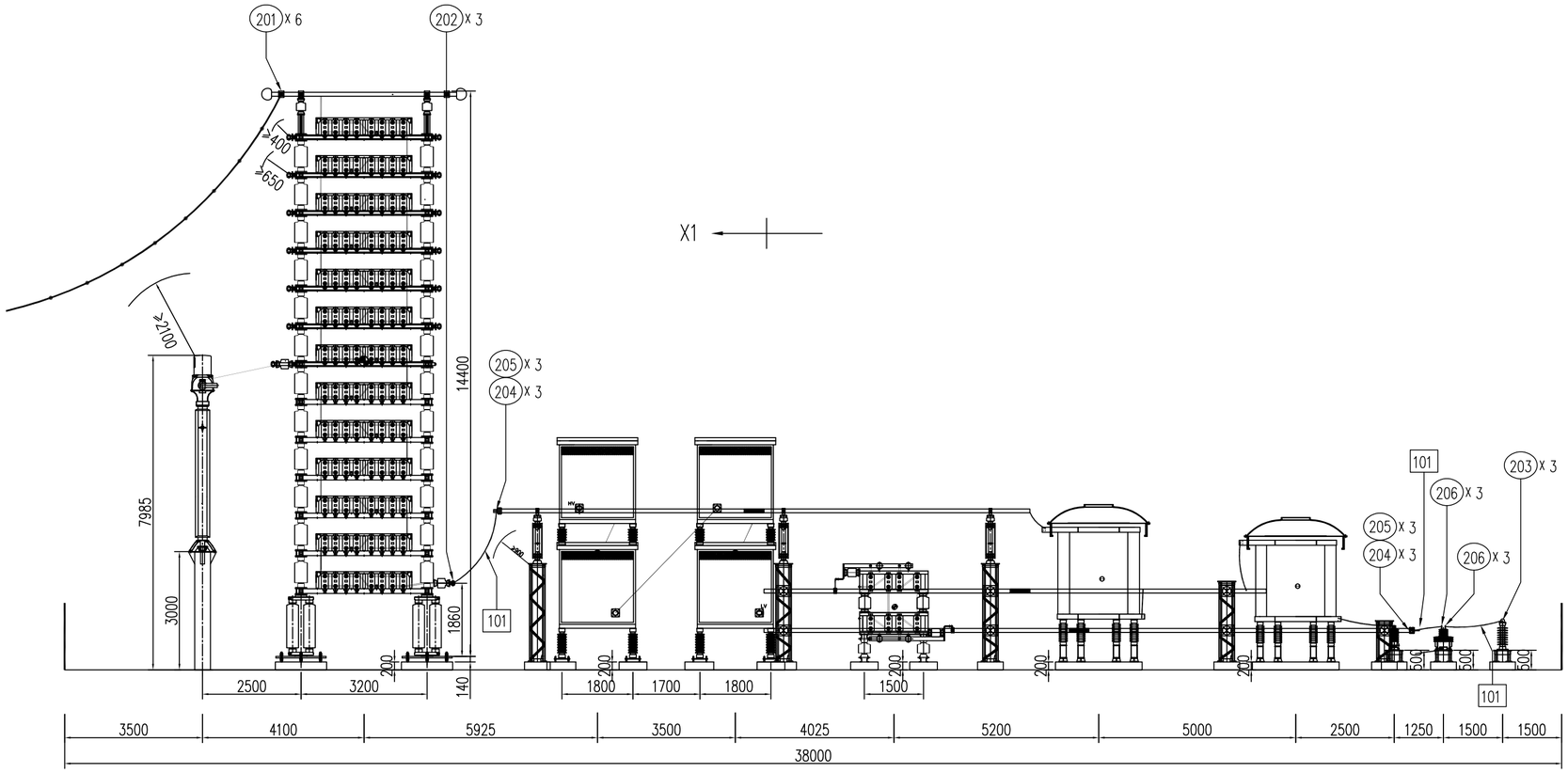

1-1断面图

Section 1-1

设备材料表

编号	名 称	规 范	单位	数量		备 注
				每相	每组	
101	铝绞线	JL-300-37	米	50	150	甲供，设备间连线
201	管母引流线夹	MGTT-100/600KY	套	2	6	甲供，C1进线，配芯棒
202	管母引流线夹	MGTT-60/300Y	套	1	3	甲供，C1至E1管母
203	管母引流线夹	MGTT-100/300Y	套	1	3	甲供，T4至中性点管母
204	管母T接金具	MGP-100（100x100）	套	2	6	甲供，C1至E1管母、E3管母至T4
205	0°单导线设备线夹	SY-300A（100x100）	套	2	6	甲供，E3管母至T4
206	90°单导线铜铝过渡设备线夹	SYG-300C（85x80）	套	2	6	甲供，T4至中性点管母

Table of Equipment and Materials

NO.	Name	Specification	Unit	Qty		Remark
				Per Phase	Per Group	
101	Aluminium Stranded Conductor	JL-300-37	m	50	150	Supplied by Owner
201	Jumper Wire Connector	MGTT-100/600KY	Set	2	6	Supplied by Owner
202	Jumper Wire Connector	MGTT-60/300Y	Set	1	3	Supplied by Owner, C1 to E1 bus
203	Jumper Wire Connector	MGTT-100/300Y	Set	1	3	Supplied by Owner, T4 to Neutral bus
204	T Connector	MGP-100（100x100）	Set	2	6	Supplied by Owner, C1 to E1 bus, E3 bus to T4
205	0° Terminal Clamp for Single Conductor	SY-300A（100x100）	Set	2	6	Supplied by Owner, E3 bus to T4
206	90° Terminal Clamp for Single Conductor	SYG-300C（85x80）	Set	2	6	Supplied by Owner, T4 to Neutral bus

说明：

1、在安装设备和导线时，注意满足空气净距要求；

2、电容器C1与不平衡电流互感器T1间的连接导线及连接金具由厂家成套提供。

NOTES:

1. When installing equipment and wires, pay attention to the air clearance requirements;

2. The connecting wires and connecting fittings between the capacitor C1 and the unbalanced current transformer T1 are provided by the manufacturer.

巴基斯坦默蒂亚里—拉合尔±660kV直流输电工程

±660kV HVDC Project from Matiari to Lahore in Pakistan

NATIONAL TRANSMISSION & DESPATCH COMPANY (NTDC) LIMITED PAKISTAN

CONTRACTOR 国家电网 STATE GRID 中国电力技术装备有限公司 CHINA ELECTRIC POWER EQUIPMENT AND TECHNOLOGY CO.,LTD.

拉合尔±660kV换流站

±660kV Lahore Converter Station

设计阶段 PHASE: 施工图 Detailed Design

M L H V D C - L C S - C E T - D D - E C - 0 2 0 5 - 0 0 4 A

	姓名 Name	日期 Date
设计 Designed	沈宏	2019.06.30
校核 Checked	李迎 苟斌	2019.06.30
审核 Reviewed	田俊璐	2019.06.30
批准 Approved	张伟	2019.06.30
比例 Scale	1:100	图号 DWG NO. 49-B60011S-D0205-004

HP12/24交流滤波器小组1-1断面图

Section 1-1 of HP12/24 ACF Sub-bank

版本 REV. A

结构	程俊	2019.03
专业 Speciality	会签 Sign	日期 Date

420X594

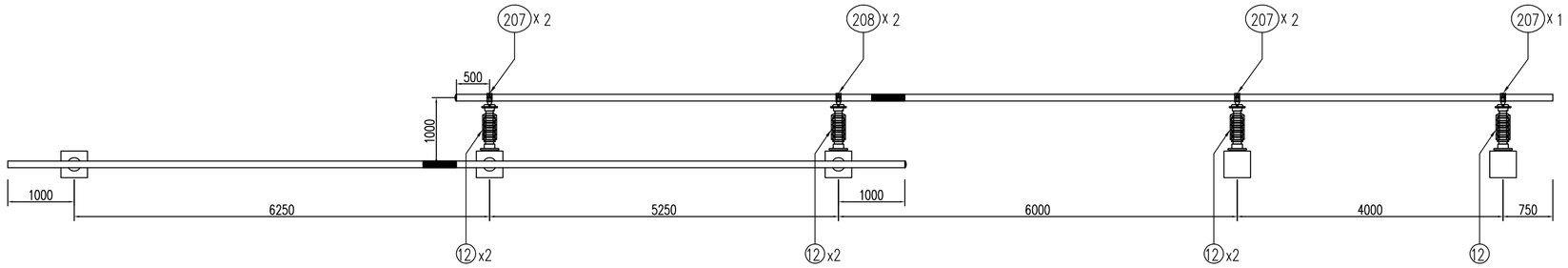

E1/E2/E3母线平面布置图
Layout of E1/E2/E3 Bus

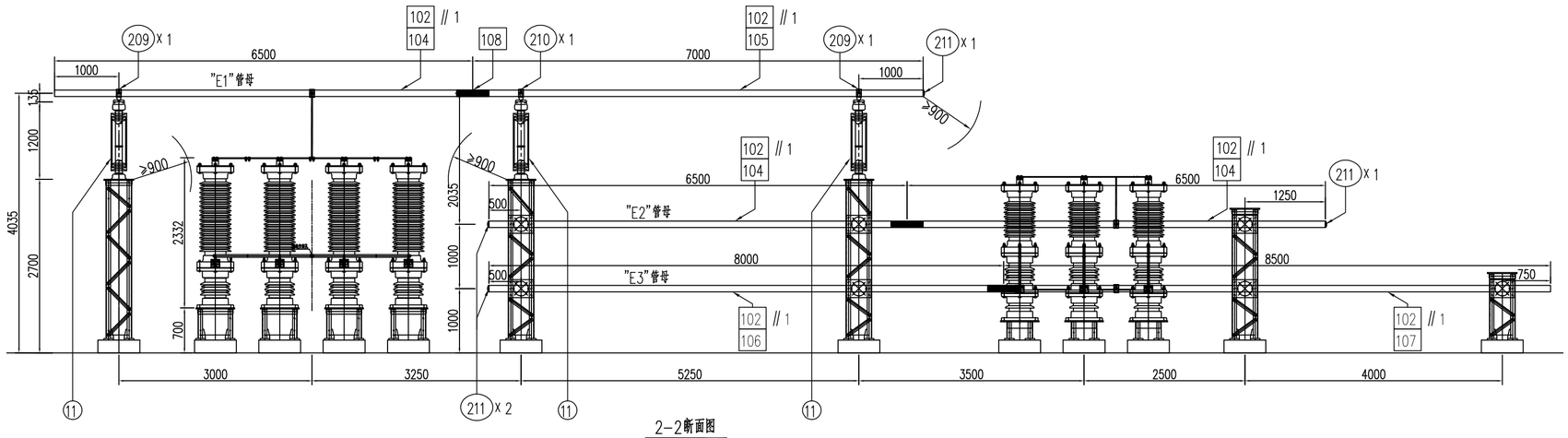

2-2断面图
Section 2-2

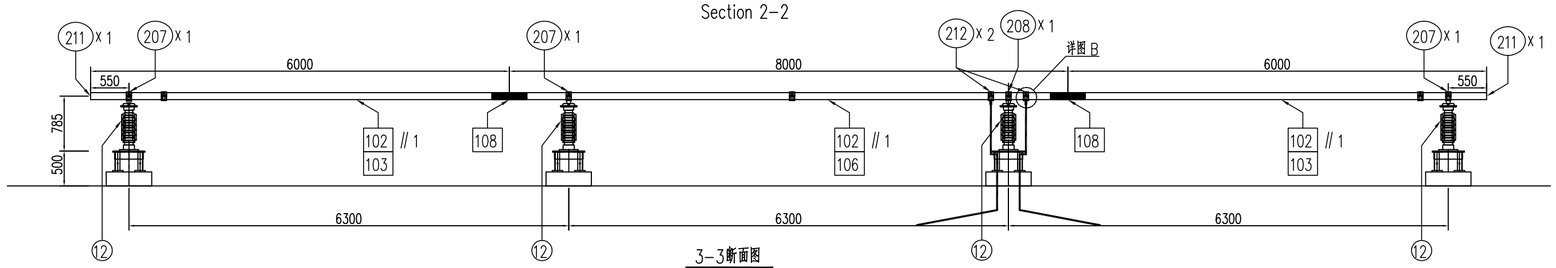

3-3断面图
Section 3-3

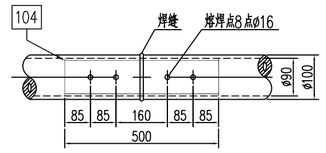

注：铝管母线采用氩弧焊接。焊接时，铝管母线接头的两端倒角45°，避免接头外的焊缝与衬强管焊接在一起，焊好后锉去毛刺。

详图A 铝管母线连接图

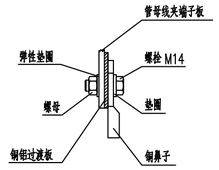

详图 B 中性点母线接地引下线接头示意图

NOTES:

1. This sectional view shows the tube section of the HP12/24 AC filter bank, and E1, E2, E3 and N respectively correspond to the equipotential points in the wiring diagram;
2. When the busbar is assembled by multi-stage tube mother, the liner should be added. For the installation method, see "Detail A Aluminium Tube Busbar Connection Diagram";
3. The support tube is provided with a damper line (LGJ-300 aluminum stranded wire), and its length is 110% of the tube;
4. Neutral busbar grounding should be added with vertical grounding pole. The connection method and related materials are listed in "B60011S-D0405 Volume";
5. The materials in the equipment material table are listed by a 500kV AC HP12/24 filter group.

设备材料表　　Table of Equipment and Materials

编号	名称	规范	单位	数量 每组	备注	NO.	Name	Specification	Unit	Qty Per Group	Remark
11	特式支柱绝缘子	ZSW1-126/12.5-4	支	9	抚顺电瓷制造有限公司	11	Post Insulator	ZSW1-126/12.5-4	Pcs	9	Fushun Electric Porcelain Manufacturing Co.,Ltd.
12	特式支柱绝缘子	ZSW1.1-40.5/12.5-4	支	25	抚顺电瓷制造有限公司	12	Post Insulator	ZSW1.1-40.5/12.5-4	Pcs	25	Fushun Electric Porcelain Manufacturing Co.,Ltd.
102	钢芯铝绞线	JL/G1A-300/25-48/7	米	165	甲供，管母卷制线，长度为管母电110%	102	ACSR	JL/G1A-300/25-48/7	m	165	Supplied by Owner
103	铝镁合金管母	6063G-ø100/90，L=6000mm	根	2	甲供	103	Aluminum Alloy Tube	6063G-ø100/90，L=6000mm	Pcs	2	Supplied by Owner
104	铝镁合金管母	6063G-ø100/90，L=6500mm	根	9	甲供	104	Aluminum Alloy Tube	6063G-ø100/90，L=6500mm	Pcs	9	Supplied by Owner
105	铝镁合金管母	6063G-ø100/90，L=7000mm	根	3	甲供	105	Aluminum Alloy Tube	6063G-ø100/90，L=7000mm	Pcs	3	Supplied by Owner
106	铝镁合金管母	6063G-ø100/90，L=8000mm	根	4	甲供	106	Aluminum Alloy Tube	6063G-ø100/90，L=8000mm	Pcs	4	Supplied by Owner
107	铝镁合金管母	6063G-ø100/90，L=8500mm	根	3	甲供	107	Aluminum Alloy Tube	6063G-ø100/90，L=8500mm	Pcs	3	Supplied by Owner
108	铝镁合金管母	6063G-ø89/79，L=500mm	根	11	甲供	108	Aluminum Alloy Tube	6063G-ø89/79，L=500mm	Pcs	11	Supplied by Owner
109	铜绞线	TJ-150	米	20	乙供	105	Copper Stranded Wire	TJ-150	m	20	Supplied by Constructor
207	管母滑动金具	MGG1-100/ø190（4-ø14）	套	18	甲供	207	Bus Support	MGG1-100/ø190（4-ø14）	Set	18	Supplied by Owner
208	管母固定金具	MGG2-100/ø190（4-ø14）	套	7	甲供	208	Bus Support	MGG2-100/ø190（4-ø14）	Set	7	Supplied by Owner
209	管母滑动金具	MGG1-100/ø140（4-ø14）	套	6	甲供	209	Bus Support	MGG1-100/ø140（4-ø14）	Set	6	Supplied by Owner
210	管母固定金具	MGG2-100/ø140（4-ø14）	套	3	甲供	210	Bus Support	MGG2-100/ø140（4-ø14）	Set	3	Supplied by Owner
211	管母带阻尼线封端盖	MGF1-100	套	14	甲供	211	End Cap（with Damping Clamp）	MGF1-100	Set	14	Supplied by Owner
212	管母T接金具	MGT-100A	套	2	甲供	212	T Connector	MGT-100A	Set	2	Supplied by Owner
291	铜鼻子	DTM-150	套	2	乙供	291	Copper Terminal Lug	DTM-150	Set	2	Supplied by Constructor
292	铜铝过渡板	MG-100x10	套	2	乙供	292	Copper to Aluminum Pad	MG-100x10	Set	2	Supplied by Constructor
293	放热焊点	A: 150mm²B: 120mm²	套	2	乙供	293	Exothermic Welding	A: 150mm²B: 120mm²	Set	2	Supplied by Constructor
294	绝缘护套	适配ø100/90管母线	米	95	乙供，E2、E3管母用	294	Insulating Sheath	for ø100/90 bus	m	95	Supplied by Constructor

说明：

1、本断面图为HP12/24交流滤波器组管母断面，E1、E2、E3及N分别对应配置接线图中的等电位点；
2、母线由多段管母组装时需增设衬管，安装方式参见"详图A 铝管母线连接图"；
3、支撑管母设置阻尼线（LGJ-300铝绞线），其长度为管母长度的110%；
4、中性点母线接地应加打垂直接地极，连接方式及相关材料开列于"B60011S-D0405分册"；
5、设备材料表中材料按一个500kV交流HP12/24滤波器小组开列。

结构	祁建	2019.03
专业 Speciality	会签 Sign	日期 Date

巴基斯坦默蒂亚里—拉合尔±660kV直流输电工程
±660kV HVDC Project from Matiari to Lahore in Pakistan

NATIONAL TRANSMISSION & DESPATCH COMPANY (NTDC) LIMITED PAKISTAN

CONTRACTOR 国家电网 STATE GRID 中国电力技术装备有限公司 CHINA ELECTRIC POWER EQUIPMENT AND TECHNOLOGY CO.,LTD.

拉合尔±660kV换流站
±660kV Lahore Converter Station

设计阶段 PHASE：施工图 Detailed Design

M L H V D C - L C S - C E T - D D - E C - 0 2 0 5 - 0 0 5 A

	姓名 Name	日期 Date
设计 Designed	沈之龙	2019.06.30
校核 Checked	李迎 肖斌	2019.06.30
审核 Reviewed	田俊强	2019.06.30
批准 Approved	刘伟	2019.06.30
比例 Scale	1:50	图号 DWG NO.

HP12/24交流滤波器小组2-2、3-3断面图
Section 2-2/3-3 of HP12/24 ACF Sub-bank

49-B60011S-D0205-005　版本 REV. A

420X594

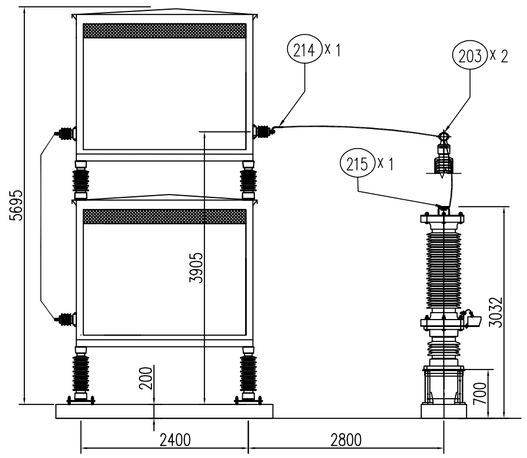

A–A

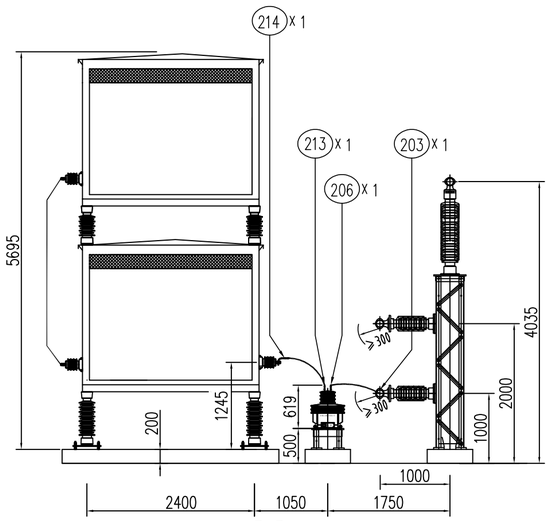

B–B

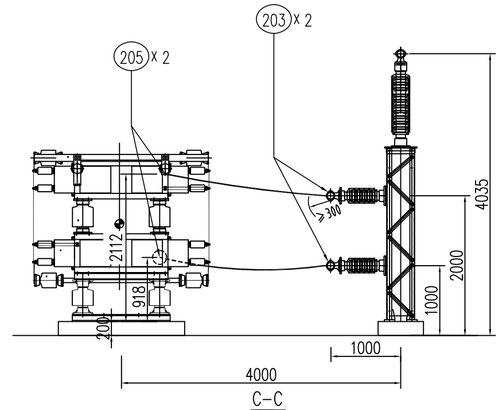

C–C

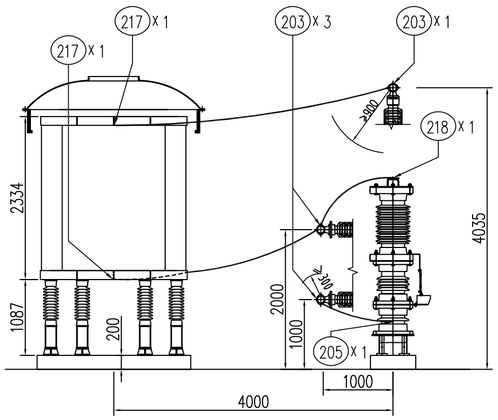

D–D

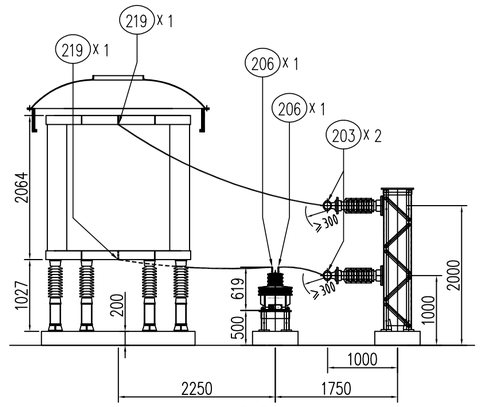

E–E

说明：

1、在安装设备和导线时，注意满足空气净距要求；

2、设备间连线为JL-300-37，数量开列于B60011S-D0205-004图中。

NOTES:

1. When installing equipment and wires, pay attention to the air clearance requirements;

2. The connection between equipment is JL-300-37, and the quantity is listed in the B60011S-D0205-004.

设备材料表 / Table of Equipment and Materials

编号	名 称	规 范	单位	数量 每相	数量 每组	备 注	NO.	Name	Specification	Unit	Qty Per Phase	Qty Per Group	Remark
203	管母引流线夹	MGTT-100/300Y	套	11	33	甲供	203	Jumper Wire Connector	MGTT-100/300Y	Set	11	33	Supplied by Owner
205	0°单导线设备线夹	SY-300A(100x100)	套	3	9	甲供	205	0° Terminal Clamp for Single Conductor	SY-300A(100x100)	Set	3	9	Supplied by Owner
206	90°单导线铜铝过渡设备线夹	SYG-300C(85x80)	套	3	9	甲供	206	90° Terminal Clamp for Single Conductor	SYG-300C(85x80)	Set	3	9	Supplied by Owner
213	0°单导线铜铝过渡设备线夹	SYG-300A(85x80)	套	1	3	甲供	213	0° Terminal Clamp for Single Conductor	SYG-300A(85x80)	Set	1	3	Supplied by Owner
214	0°单导线设备线夹	SY-300A(110x80)	套	2	6	甲供	214	0° Terminal Clamp for Single Conductor	SY-300A(110x80)	Set	2	6	Supplied by Owner
215	90°单导线设备线夹	SY-300C(150x150)	套	1	3	甲供	215	90° Terminal Clamp for Single Conductor	SY-300C(150x150)	Set	1	3	Supplied by Owner
217	90°单导线设备线夹	SY-300C(127x150)	套	2	6	甲供	217	90° Terminal Clamp for Single Conductor	SY-300C(127x150)	Set	2	6	Supplied by Owner
218	0°单导线设备线夹	SY-300A(170x150)	套	1	3	甲供	218	0° Terminal Clamp for Single Conductor	SY-300A(150x150)	Set	1	3	Supplied by Owner
219	90°单导线设备线夹	SY-300C(102x105)	套	2	6	甲供	219	90° Terminal Clamp for Single Conductor	SY-300C(102x105)	Set	2	6	Supplied by Owner

巴基斯坦默蒂亚里—拉合尔±660kV直流输电工程

±660kV HVDC Project from Matiari to Lahore in Pakistan

NATIONAL TRANSMISSION & DESPATCH COMPANY (NTDC) LIMITED PAKISTAN

CONTRACTOR 国家电网 STATE GRID 中国电力技术装备有限公司 CHINA ELECTRIC POWER EQUIPMENT AND TECHNOLOGY CO.,LTD.

拉合尔±660kV换流站

±660kV Lahore Converter Station

设计阶段 PHASE: 施工图 Detailed Design

MLHVDC-LCS-CET-DD-EC-020 5-006A

	姓名 Name	日期 Date
设计 Designed	高威	2019.06.30
校核 Checked	李迎 沈志	2019.06.30
审核 Reviewed	田俊骥	2019.06.30
批准 Approved	刘伟	2019.06.30

HP12/24交流滤波器小组A-A--E-E断面图

Section A-A to E-E of HP12/24 ACF Sub-bank

比例 Scale: 1:50 | 图号 DWG NO.: 49-B60011S-D0205-006 | 版本 REV.: A

420X594

设备材料表

编号	名 称	规 范	单位	数量	备 注
1a	高压电容器C1	TAL510-121680/585-1QW	组	24	桂林电力电容器有限责任公司
1b	电流互感器T1	LB7-330	台	24	桂林电力电容器有限责任公司
2	电容器C2	TAL74.8-6304/394-1W	组	24	桂林电力电容器有限责任公司
3	电抗器L1	LKK-35-391.8-19.463	台	24	北京电力设备总厂有限公司
4	电抗器L2	LKK-20-495.9-9.762	台	24	北京电力设备总厂有限公司
5	电阻器R	600Ω	组	24	上海吉泰电阻器有限公司
6	避雷器F1	Y71W1-144/354W	台	24	抚顺电瓷制造有限公司
7	避雷器F2	Y10W1-48/109.2W	台	24	抚顺电瓷制造有限公司
8	电流互感器T2	LZZBJ-24W,300/1A,5P20/5P20/0.2/0.2,5VA	套	24	江苏思源赫兹互感器有限公司
9	电流互感器T3	LZZBJ-24W,50/1A,5P20/5P20,5VA	套	24	江苏思源赫兹互感器有限公司
10	电流互感器T4	LZZBJ-24W,500/1A,5P10/5P10,5VA	套	24	江苏思源赫兹互感器有限公司
11	棒式支柱绝缘子	ZSW1-126/12.5-4	支	72	抚顺电瓷制造有限公司
12	棒式支柱绝缘子	ZSW1.1-40.5/12.5-4	支	200	抚顺电瓷制造有限公司
101	铝绞线	JL-300-37	米	1200	甲供，设备间连线
102	钢芯铝绞线	JL/G1A-300/25-48/7	米	1320	甲供，管母防振线，长度为管母线110%
103	铝镁合金管母	6063G-ø100/90,L=6000mm	根	16	甲供
104	铝镁合金管母	6063G-ø100/90,L=6500mm	根	72	甲供
105	铝镁合金管母	6063G-ø100/90,L=7000mm	根	24	甲供
106	铝镁合金管母	6063G-ø100/90,L=8000mm	根	32	甲供
107	铝镁合金管母	6063G-ø100/90,L=8500mm	根	24	甲供
108	铝镁合金管母	6063G-ø89/79,L=500mm	根	88	甲供
109	铜绞线	TJ-150	米	160	乙供
201	管母引流线夹	MGTT-100/600KY	套	48	甲供
202	管母引流线夹	MGTT-60/300Y	套	24	甲供
203	管母引流线夹	MGTT-100/300Y	套	264	甲供
204	管母T接金具	MGP-100(100x100)	套	48	甲供
205	0°单导线设备线夹	SY-300A(100x100)	套	120	甲供
206	90°单导线铜铝过渡设备线夹	SYG-300C(85x80)	套	120	甲供
207	管母滑动金具	MGG1-100/ø190(4-ø14)	套	144	甲供
208	管母固定金具	MGG2-100/ø190(4-ø14)	套	56	甲供
209	管母滑动金具	MGG1-100/ø140(4-ø14)	套	48	甲供
210	管母固定金具	MGG2-100/ø140(4-ø14)	套	24	甲供
211	管母带阻尼线封端盖	MGF1-100	套	112	甲供
212	管母T接金具	MGT-100A	套	48	甲供
213	0°单导线铜铝过渡设备线夹	SYG-300A(85x80)	套	24	甲供
214	0°单导线设备线夹	SY-300A(110x80)	套	48	甲供
215	90°单导线设备线夹	SY-300C(150x150)	套	24	甲供
217	90°单导线设备线夹	SY-300C(127x150)	套	48	甲供
218	0°单导线设备线夹	SY-300A(170x150)	套	24	甲供
219	90°单导线设备线夹	SY-300C(102x105)	套	48	甲供
291	铜鼻子	DTM-150	套	16	乙供
292	铜铝过渡板	MG-100x10	套	16	乙供
293	放热焊接	A: 150mm ²B: 120mm ²	套	16	乙供
294	绝缘护套	适配ø100/90管母线	米	760	乙供，用于E2、E3管母

Table of Equipment and Materials

NO.	Name	Specification	Unit	Qty	Remark
1a	Capacitor C1	TAL510-121680/585-1QW	Set	24	Guilin Power Capacitor Co.,Ltd
1b	Current Transformer T1	LB7-330	Set	24	Guilin Power Capacitor Co.,Ltd
2	Capacitor C2	TAL74.8-6304/394-1W	Set	24	Guilin Power Capacitor Co.,Ltd
3	Reactor L1	LKK-35-391.8-19.463	Set	24	Beijing Power Equipment Group Co.,Ltd.
4	Reactor L2	LKK-20-495.9-9.762	Set	24	Beijing Power Equipment Group Co.,Ltd.
5	Resistor R	600Ω	Set	24	Shanghai Gino Telema Resistors Co.,Ltd
6	Serge Arrester F1	Y71W1-144/354W	Set	24	Fushun Electric Porcelain Manufacturing Co.,Ltd.
7	Serge Arrester F2	Y10W1-48/109.2W	Set	24	Fushun Electric Porcelain Manufacturing Co.,Ltd.
8	Current Transformer T2	LZZBJ-24W,300/1A,5P20/5P20/0.2/0.2,5VA	Set	24	Jiangsu Sieyuan Hertz
9	Current Transformer T3	LZZBJ-24W,50/1A,5P20/5P20,5VA	Set	24	Jiangsu Sieyuan Hertz
10	Current Transformer T4	LZZBJ-24W,500/1A,5P10/5P10,5VA	Set	24	Jiangsu Sieyuan Hertz
11	Post Insulator	ZSW1-126/12.5-4	Pcs	72	Fushun Electric Porcelain Manufacturing Co.,Ltd.
12	Post Insulator	ZSW1.1-40.5/12.5-4	Pcs	200	Fushun Electric Porcelain Manufacturing Co.,Ltd.
101	Aluminium Stranded Conductor	JL-300-37	m	1200	Supplied by Owner
102	ACSR	JL/G1A-300/25-48/7	m	1320	Supplied by Owner
103	Aluminum Alloy Tube	6063G-ø100/90,L=6000mm	Pcs	2	Supplied by Owner
104	Aluminum Alloy Tube	6063G-ø100/90,L=6500mm	Pcs	9	Supplied by Owner
105	Aluminum Alloy Tube	6063G-ø100/90,L=7000mm	Pcs	3	Supplied by Owner
106	Aluminum Alloy Tube	6063G-ø100/90,L=8000mm	Pcs	4	Supplied by Owner
107	Aluminum Alloy Tube	6063G-ø100/90,L=8500mm	Pcs	3	Supplied by Owner
108	Aluminum Alloy Tube	6063G-ø89/79,L=500mm	Pcs	11	Supplied by Owner
109	Copper Stranded Wire	TJ-150	m	160	Supplied by Constructor
201	Jumper Wire Connector	MGTT-100/600KY	Set	48	Supplied by Owner
202	Jumper Wire Connector	MGTT-60/300Y	Set	24	Supplied by Owner, C1 to E1 bus
203	Jumper Wire Connector	MGTT-100/300Y	Set	264	Supplied by Owner, C1 to E1 bus, T4 to Neutral bus
204	T Connector	MGP-100(100x100)	Set	48	Supplied by Owner, E3 bus to T4
205	0° Terminal Clamp for Single Conductor	SY-300A(100x100)	Set	120	Supplied by Owner, E3 bus to T4
206	90° Terminal Clamp for Single Conductor	SYG-300C(85x80)	Set	120	Supplied by Owner, T4 to Neutral bus
207	Bus Support	MGG1-100/ø190(4-ø14)	Set	144	Supplied by Owner
208	Bus Support	MGG2-100/ø190(4-ø14)	Set	56	Supplied by Owner
209	Bus Support	MGG1-100/ø140(4-ø14)	Set	48	Supplied by Owner
210	Bus Support	MGG2-100/ø140(4-ø14)	Set	24	Supplied by Owner
211	End Cap(with Damping Clamp)	MGF1-100	Set	112	Supplied by Owner
212	Bus Support	MGT-100A	Set	48	Supplied by Owner
213	0° Terminal Clamp for Single Conductor	SYG-300A(85x80)	Set	24	Supplied by Owner
214	0° Terminal Clamp for Single Conductor	SY-300A(110x80)	Set	48	Supplied by Owner
215	90° Terminal Clamp for Single Conductor	SY-300C(150x150)	Set	24	Supplied by Owner
217	90° Terminal Clamp for Single Conductor	SY-300C(127x150)	Set	48	Supplied by Owner
218	0° Terminal Clamp for Single Conductor	SY-300A(170x150)	Set	24	Supplied by Owner
219	90° Terminal Clamp for Single Conductor	SY-300C(102x105)	Set	48	Supplied by Owner
291	Copper Terminal Lug	DTM-150	Set	16	Supplied by Constructor
292	Copper to Aluminum Pad	MG-100x10	Set	16	Supplied by Constructor
293	Exothermic Welding	A: 150mm ²B: 120mm ²	Set	16	Supplied by Constructor
294	Insulating Sheath	for ø100/90 bus	m	760	Supplied by Constructor

巴基斯坦默蒂亚里—拉合尔±660kV直流输电工程

±660kV HVDC Project from Matiari to Lahore in Pakistan

NATIONAL TRANSMISSION & DESPATCH COMPANY (NTDC) LIMITED PAKISTAN

CONTRACTOR 国家电网 STATE GRID 中国电力技术装备有限公司 CHINA ELECTRIC POWER EQUIPMENT AND TECHNOLOGY CO.,LTD.

拉合尔±660kV换流站

±660kV Lahore Converter Station

设计阶段 PHASE: 施工图 Detailed Design

M L H V D C - L C S - C E T - D D - E C - 0 2 0 5 - 0 0 7 A

	姓名 Name	日期 Date
设计 Designed	张宏	2019.06.30
校核 Checked	葛斌	2019.06.30
审核 Reviewed	田俊强	2019.06.30
批准 Approved	刘伟	2019.06.30

设备材料汇总表

Summary of Equipment and Materials

比例 Scale: 1:200 | 图号 DWG NO.: 49-B60011S-D0205-007 | 版本 REV.: A

420X594